Technichal Data Sheet LEIFELD JRG Mount 1732, 1733

Description:	LEIFELD SaniMount, fit elbows at the standard centers of: 80, 100, 120 or 153 mm. For elbows with 40 mm centers. Rotate Wall-Elbows in 22.5 degree (Part.# 1725 - 45 degree) steps. Pre-drilled to secure a syphon using the LEIFELD Cable Clamp Part.# 1053, a threaded-stud and a pipe-clamp. Centers pre-stamped both sides.
Part.#:	see table below
Material:	DX51D+Z 275 MA, thickness 2,5mm, sendzimier galvanized
Manufacturer:	LEIFELD
Customs code:	73089059
Country of origin:	DE
REACH, ROHS, Building Products Regulations:	Not applicable

Part.#	GTIN	L (mm)	B (mm)	Height (mm)	Weight (kg/Pce.)
1732	4250289303705	424	50	33	0,446
1733	4250289303712	424	50	flat	0,363

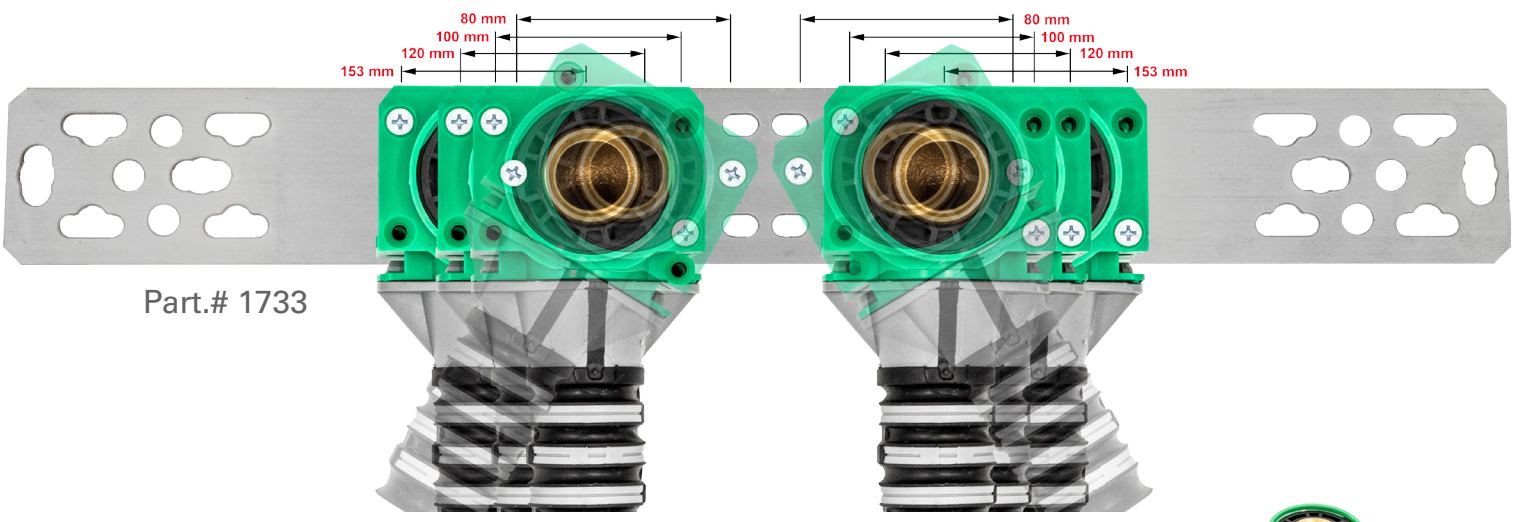

Part.# 1733

with M4 threads

Part.# 1732

Further Resources

Leifeld Order system:	https://www.leifeld.de - Menu „Catalogue – Order system“
Product usage:	https://www.leifeld.de - Menu „Support“
Product film:	http://produkt.leifeld.de/film10-EN.htm

Heinrich Leifeld GmbH • Hauptstraße 35 • D-33178 Borchen • Tel.: +49 (0) 52 51 13 63 - 0 • Fax: +49 (0) 52 51 13 63 - 66 • e-Mail: info@leifeld.de • www.leifeld.de