Technical Data Sheet — Connection Nipple VNCxxFxx

Description:	EUROTIS Connection Nipple, flat-sealing from Copper Pipe (hard, semi-hard, cutting-ring) onto EUROTIS CSST(flat-sealing flange)
Part.#:	see table below
Material:	dezincification resistant brass (CW617N)
Thread:	DIN 259 ISO 228 G (BSP Whitworth cylindrical)
Operating temperature:	Max. 250°C
Manufacturer:	EUROTIS
Customs code:	74122000
Country of origin:	IT
REACH, ROHS, Building Products Regulations:	Not applicable
UBA Positive List:	Approved for use with drinking water
DVGW certified uses:	Drinking water, solar and heating

Part.#	GTIN	CU (mm)	DN	G (Inch)	B (mm)	L (mm)	L[1] (mm)	SW (mm)	Weight (kg/Pce.)
VNC15F12	4250289303194	15	12	G 1/2	12,0	27,0	10,5	22	0,06
VNC18F12	4250289303217	18	12	G 1/2	12,0	29,0	10,5	27	0,10
VNC18F15	4250289303224	18	15	G 3/4	15,0	31,0	10,5	27	0,11
VNC22F15	4250289303255	22	15	G 3/4	15,0	31,0	10,5	30	0,12
VNC22F20	4250289303262	22	20	G 1	20,0	39,0	13,0	34	0,18
VNC28F20	4250289303293	28	20	G 1	20,0	41,0	14,5	42	0,34
VNC28F25	4250289303309	28	25	G 1.1/4	25,0	41,0	14,5	42	0,37

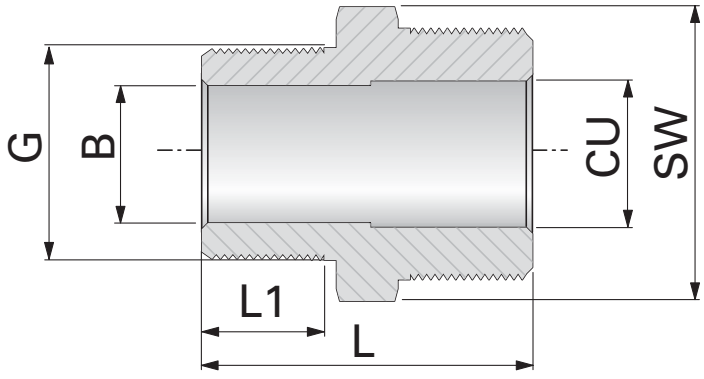

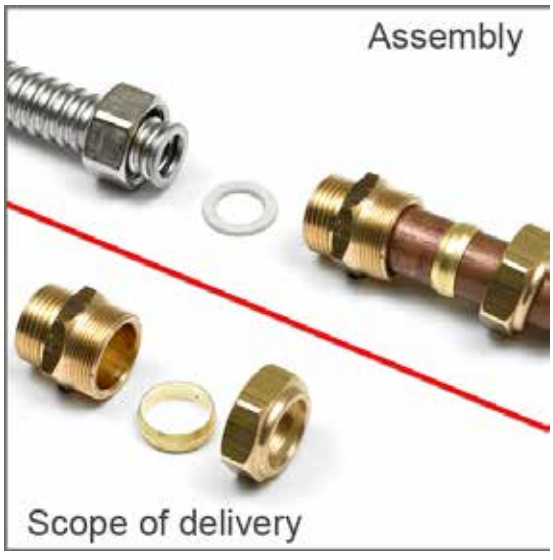

Further Resources

Technical Information EUROTIS CSST:	https://wiki.leifeld.de
Leifeld Order system:	https://www.leifeld.de
Product film:	https://produkt.leifeld.de/film6-EN.htm